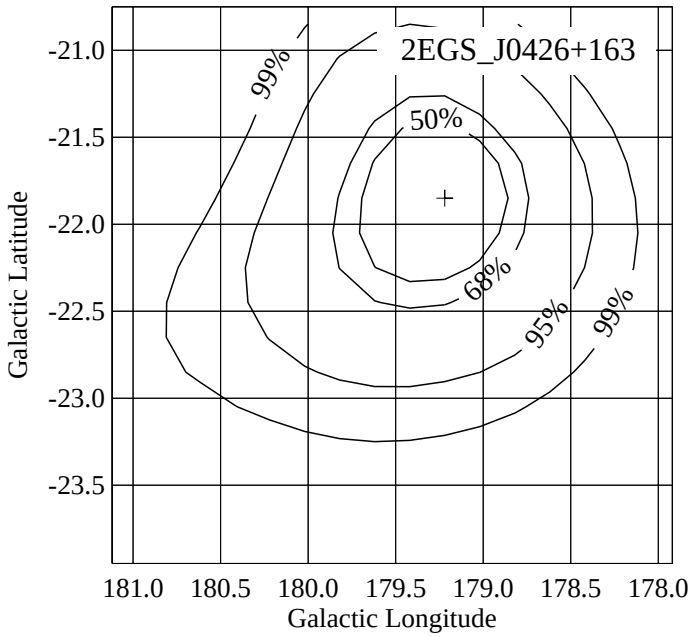
2EGS_J0426+163
99%
50%
68%
95%
99%
-21.0
-21.5
-22.0
-22.5
-23.0
-23.5
Galactic Latitude
181.0
180.5
180.0
179.5
179.0
178.5
178.0
Galactic Longitude

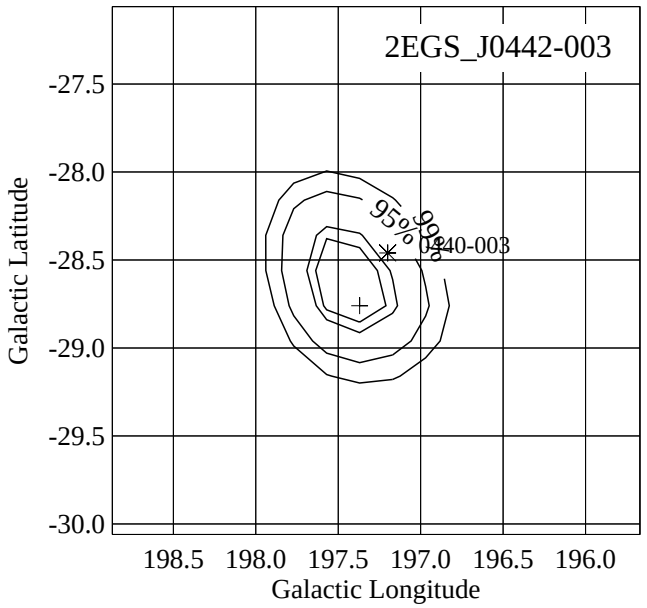
2EGS_J0442-003
95%
99%
0440-003
-27.5
-28.0
-28.5
-29.0
-29.5
-30.0
Galactic Latitude
198.5
198.0
197.5
197.0
196.5
196.0
Galactic Longitude

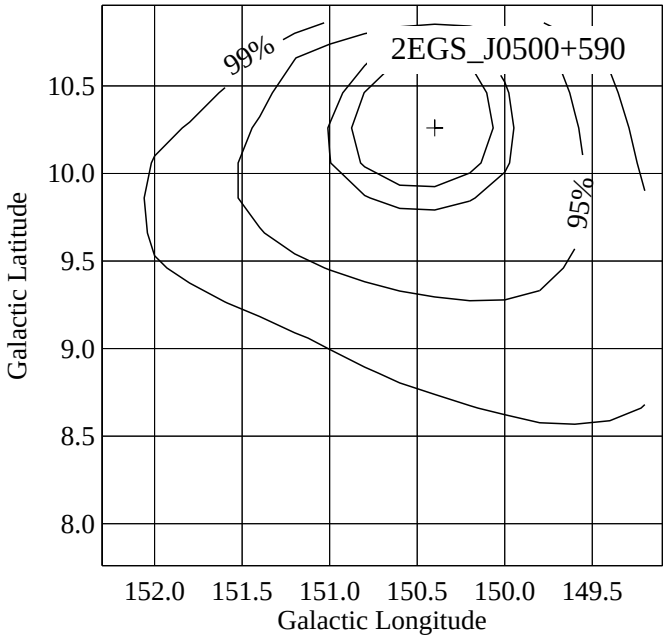
2EGS_J0500+590
99%
95%
10.5
10.0
9.5
9.0
8.5
8.0
Galactic Latitude
152.0
151.5
151.0
150.5
150.0
149.5
Galactic Longitude

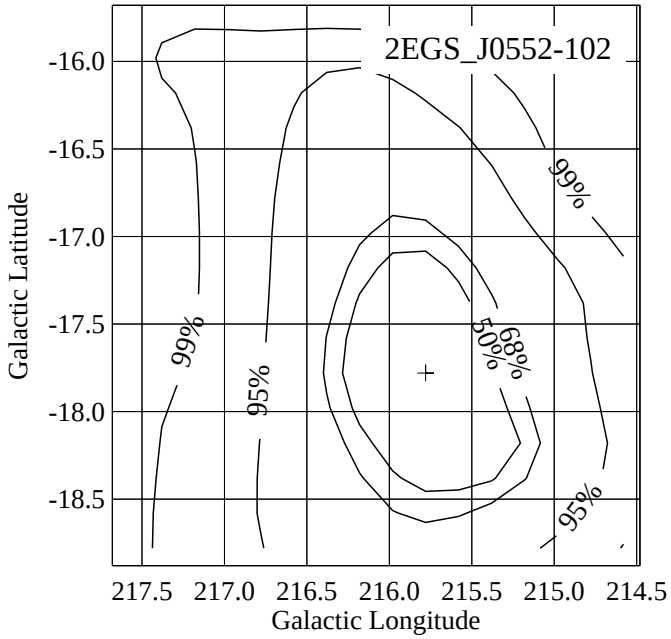
2EGS_J0552-102
99%
99%
95%
50%
68%
95%
-16.0
-16.5
-17.0
-17.5
-18.0
-18.5
Galactic Latitude
217.5
217.0
216.5
216.0
215.5
215.0
214.5
Galactic Longitude

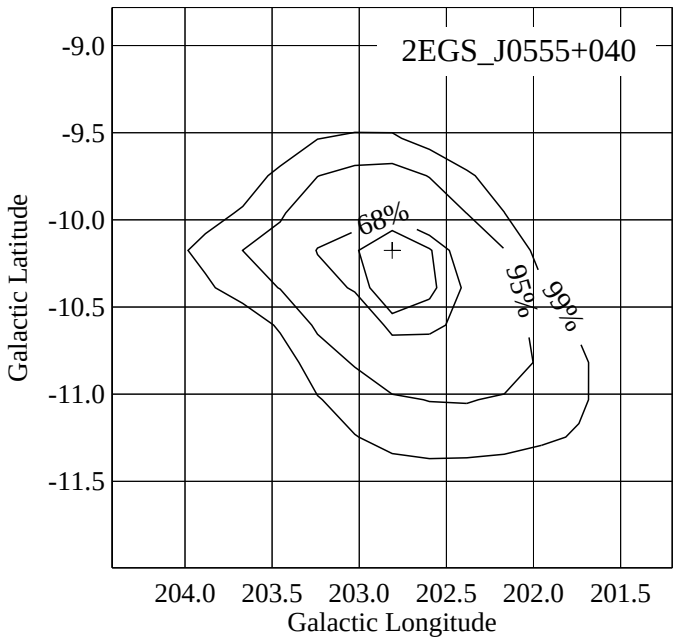
2EGS_J0555+040
68%
95%
99%
-9.0
-9.5
-10.0
-10.5
-11.0
-11.5
Galactic Latitude
204.0
203.5
203.0
202.5
202.0
201.5
Galactic Longitude

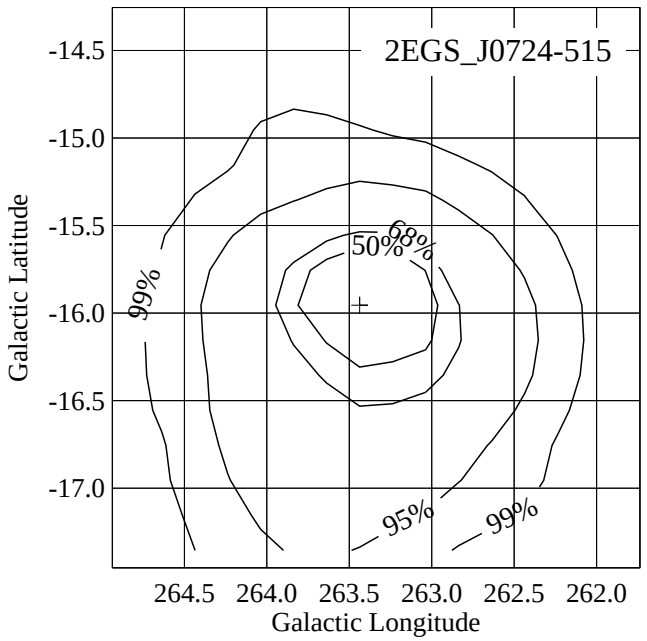
2EGS_J0724-515
99%
50%
68%
95%
99%
-14.5
-15.0
-15.5
-16.0
-16.5
-17.0
Galactic Latitude
264.5
264.0
263.5
263.0
262.5
262.0
Galactic Longitude